B&PLUS

Issued May. 29, 2019

No. T 315A04De

D

Remote sensor system for temperature sensors

RS080series

Safety Considerations

Please read carefully before using and full attention to Safety Considerations.
(See the attached T318501)

■ Index ■

1.Product summary
1.1 System configuration · 3

2. Transmission amplifier specifications
2.1. Product specification · 4
2.2. Accessible temperature sensor · 4
2.3. LED indication · 4

3. Transmission head specifications
3.1. Compact shape · 5
3.2. Ring shape · 5

4. Output head specifications
4.1. Compact shape · 6
4.2. Ring shape · 6

5. Current output amplifier
5.1. Product specification · 7
5.2. Output electric current level · 7
5.3. LED indication · 7

6. Wiring
6.1. Wiring of a transmission amplifier and the transmission head · · · · · · · 8
6.2. Wiring of a transmission amplifier and the transmission head · · · · · · · 8
6.3. Wiring of the output head · 9
6.4. Connection of current output amplifier · · · · · · · · · · · · · · · · · 9

7.Installation
7.1. Neighborhood metal and mutual interference and transmission domain figure · · · · · · · 10

8.Protocol
8.1. Communication Setting · 11
8.2. Regarding a command · 11
8.2.1. Command for data requirements · · · · · · · · · · · · · · · · · · · 11
8.2.2. Command for stopping automatic answering mode · · · · · · · · · · 11
8.2.3. Command for starting automatic answering mode · · · · · · · · · · 11
8.3. List of error codes (ASCII notation) · · · · · · · · · · · · · · · · · 11

9. Setting method of the transmission amplifier
9.1. Wiring to a transmission amplifier · · · · · · · · · · · · · · · · · · 12
9.2. Setting of the transmission amplifier by the application software · · · 12

10. Setting of the output head ·
10.1. Wiring of the output head · 13
10.2. Setting of the output head by the application software · · · · · · · · 13

Request for use on

※ Specifications subject to change without notice.
If there is a signal of notice about the contents of this document, hope you'll give me your contact us, thank you.

1.Product summary

This product feeds from an output head to a transmission head. And feeds to the bottom apparatus using the electromagnetic induction technology.
In addition, it is transmitted to an output head by wireless via a transmission amplifier to a transmission head, and temperature measuring of a lower temperature sensor is sent to the higher apparatus. Temperature measuring signal sent by an output head is the serial signal (RS-232C). It is possible to output 4...20mA currency by putting output amplifier.
The temperature sensor which can measure is a thermocouple (8 signals), a resistance thermometer (2 signals), thermistor (2 signals). Possible to presence the detection of guide wire malfunction of the sensor by setting attached application. Also variety temperature sensors and the number of the temperature sensors.
In addition, at the time of the current output amplifier use, it is possible to set temperature in the 4mA output and temperature in the 20mA output.

1.1 System configuration

The system constitution of the product is as follows.

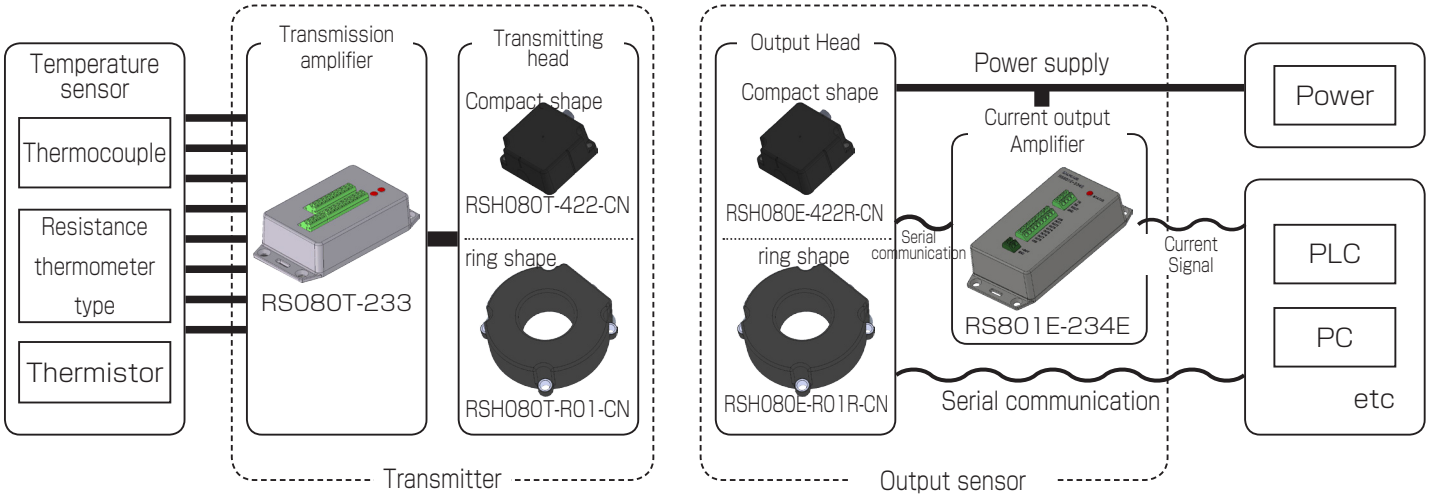

A transmission head and the output head have two kinds of the compact shape and ring geometry.
Please choose upon the usage of the environment.

Device		Product type code	Description of each part
Transmission amplifier		RS080T-233	Able to connect a temperature sensor to up to 8 signals.
Transmitting head	Compact shape	RSH080T-422-CN	Receiving wireless feeding from an output head and supply electricity to a lower device,
	Ring shape	RSH080T-R01-CN	
Output Head	Compact shape	RSH080E-422R-CN	Wireless feeding to a transmission head and transmit the temperature signal which has been sent to a higher apparatus in RS-232C
	Ring shape	RSH080E-R01R-CN	
Current output amplifier		RS801E-234E	A serial signal(RS-232C) which has been sent by output head converts into a current signal (4..20mA)

2. Transmission amplifier specifications

2.1. Products specification

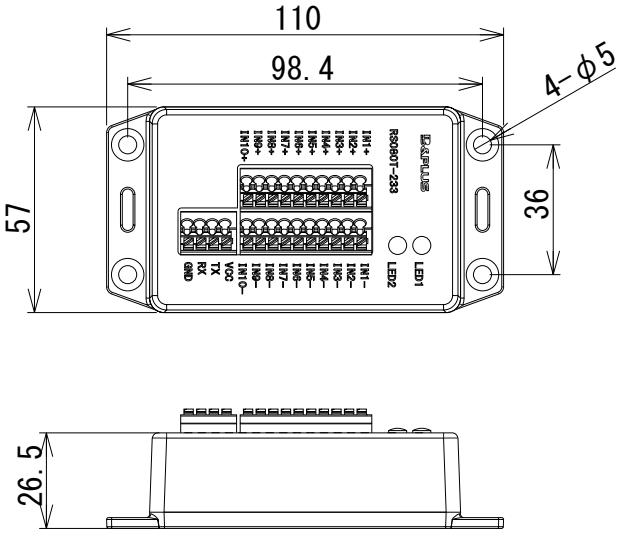

Type code		RS080T-233
Application transmission head	Corner shape	RSH080T-422-CN
	ring shape	RSH080T-R01-CN
Operating temperature / humidity		0...70℃ / 35...90%RH
Storage temperature / humidity		0...80℃ / 35...90%RH
Output interface		RS-232C Connects to the PC, and the number of sensors and the different setting are possible
Applicable sensor		Thermocouple (up to 8 signal) Resistance bulb (up to 2 signal) Thermistor (up to 2 signals)
Output rate	Thermocouple	6Hz / 1ch without the disconnection detection 4.2Hz / 1ch with the disconnection detection
	Resistance thermometer	6Hz / 1ch
	Thermistor	6Hz / 1ch
Compensated error of the cold junction		± 0.2 degrees Celsius (at the time of thermocouple use)
Resolution		0.01℃
Protection class		Without protection
Case material		ABS
Standard		CE acquisition finished
Weight		80g

■ Accuracy

Thermocouple		Resistance themometer		Thermistor	
J type	± 0.1℃	PT10	± 0.1℃	44004/44033	± 0.1℃
K type	± 0.1℃	PT50	± 0.1℃	44005/44030	± 0.1℃
E type	± 0.1℃	PT100	± 0.1℃	44007/44034	± 0.1℃
N type	± 0.2℃	PT200	± 0.1℃	44006/44031	± 0.1℃
R type	± 0.7℃	PT500	± 0.1℃	44008/44032	± 0.1℃
S type	± 0.7℃	PT1000	± 0.1℃	YSI 400	± 0.1℃
T type	± 0.1℃	RTD1000	± 0.1℃	Spectrum 1003K	± 0.1℃
B type	± 1℃	RTD NI-120	± 0.1℃		

2.2. Accessible temperature sensor

The temperature sensors that this product is accessible are as follows

■ Thermocouple

type	Lower limit Temperature (℃)	Maximum limit Temperature (℃)
J type	-210	1200
K type	-265	1372
E type	-265	1000
N type	-265	1300
R type	-50	1768
S type	-50	1768
T type	-265	400
B type	40	1820

■ Resistance thermometer

type	Lower limit Temperature (℃)	Maximum limit Temperature (℃)
PT-10	-200	850
PT-50		
PT-100		
PT-200		
PT-500		
PT-1000		
RTD 1000		
RTD NI-120		

Thermistor

type	Lower limit Temperature (℃)	Maximum limit Temperature (℃)
44004/44033	-40	150
44005/44030		
44007/44034		
44006/44031		
44008/44032		
YSI 400	-80	250
Spectrum 1003K	-50	125

The transmission amplifier can be set via RS232C by application (Please see page12)

Parts	Contents	Factory setting
Category of the sensors	Type of the temperature sensor to connect *1	Thermocouple
Type of the sensors	Type of the temperature sensors	J type
Numbers of the sensors	The number of sensors to connect	8
The open detection	Detection of the sensor that is unconnected (disconnection) *2	Yes
min.	Temperature in 4mA	0℃
max.	Temperature in 20mA	200℃

*1 Cannot be use in combination with a different in the kind sensor.
*2 When choosing a resistance thermometer and thermistor, it becomes the disconnection detection forcibly.

2.3.LED (indication)

Two LED is put on a transmission amplifier and shows a kind and the type of a connected temperature sensor with a color.

■ LED1

Color	Temperature sensor
Green	Thermocouple
Blue	Resistance thermometer type
Red	Thermistor

■ LED2

Color	Thermocouple	Resistance thermometer	Thermistor
Light blue	J type	PT10	44004/44033
Green	K type	PT50	44005/44030
Violet	E type	PT100	44007/44034
Yellow	N type	PT200	44006/44031
OFF	R type	PT500	44008/44032
Red	S type	PT1000	YSI 400
Blue	T type	RTD1000	Spectrum 1003K
White	B type	RTD NI-120	

3. Transmission head specifications

3.1. Compact shape

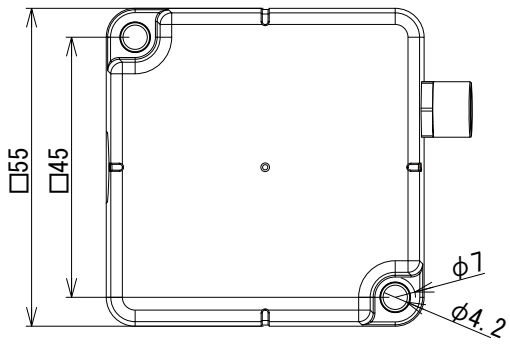

Type code	RSH080T-422-CN
Rating transmission distance	0...3mm
Center offset	± 3mm
Operating temperature / humidity	0...70℃ / 35...90%RH
Storage temperature / humidity	0...80℃ / 35...90%RH
Protection class	IP67
Case material	ABS
Connection	M8 connector 3, Pin female
Standard	CE acquired
Weight	110g

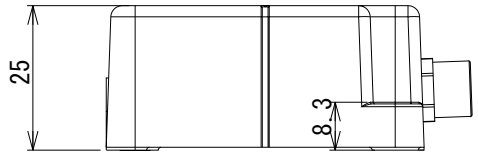

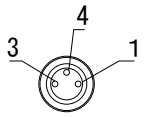

Pin	Color	Descriptions
1	Brown	Power
3	Blue	Gound
4	Black	Signal input

3.2. Ring shape

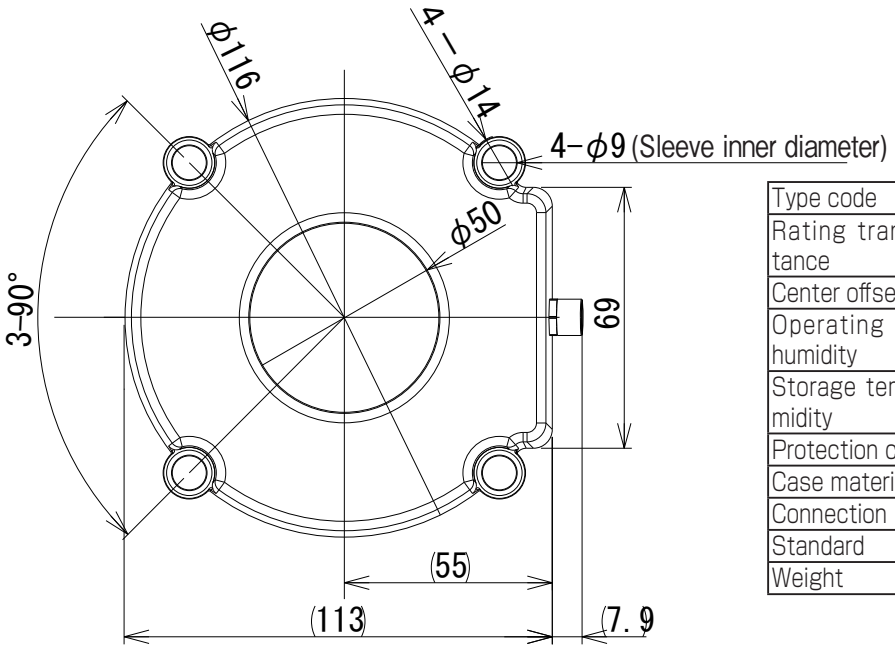

Type code	RSH080T-R01-CN
Rating transmission distance	0...6mm
Center offset	± 6mm
Operating temperature / humidity	0...50℃ / 35...90%RH
Storage temperature / humidity	0...70℃ / 35...90%RH
Protection class	IP67
Case material	PUR
Connection	M8 connector 3, Pin female
Standard	CE not acquired
Weight	410g

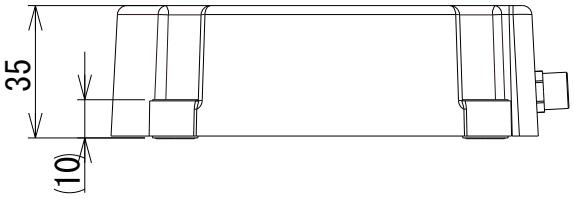

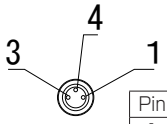

Pin	Color	Descriptions
1	Brown	Power
3	Blue	Ground
4	Black	Signal input

4. Output head specifications

4.1. Compact shape

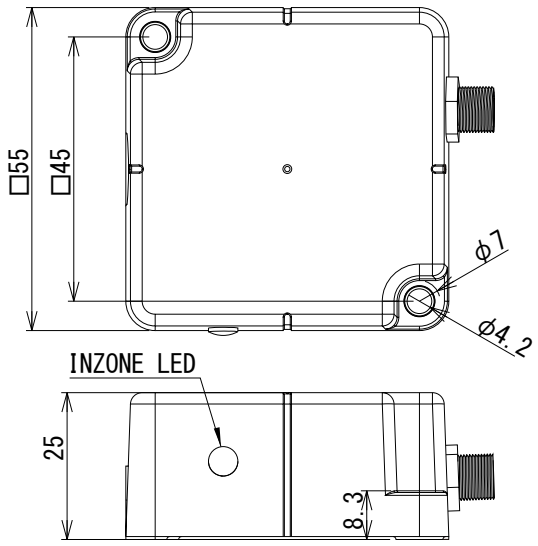

Type code	RSH080E-422R-CN
Power supply	24V DC ± 10% (incl. ripple)
Current consumption	≦ 100mA
Operating temperature / humidity	0...70℃ / 35...90%RH
Storage temperature / humidity	0...80℃ / 35...90%RH
LED (indication)	Orange: In zone Lights-out: Application transmission without head
Interface	RS-232C
Protection class	IP67
Case material	ABS
Connection	M8 connector 6 pin male
Standard	CE acquired
Weight	110g

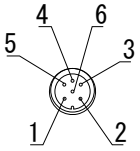

Pin	Color	Descriptions
1	Brown	Power supply +24V
2	White	Transmitting (TX)
3	Black	Receiving (RX)
4	Blue	Power supply ground (GND)
5	Green	Signal ground (SG)
6	Red	RTS RS232C In zone output H···Transmission head L: Transmission without head

4.2. Ring shape

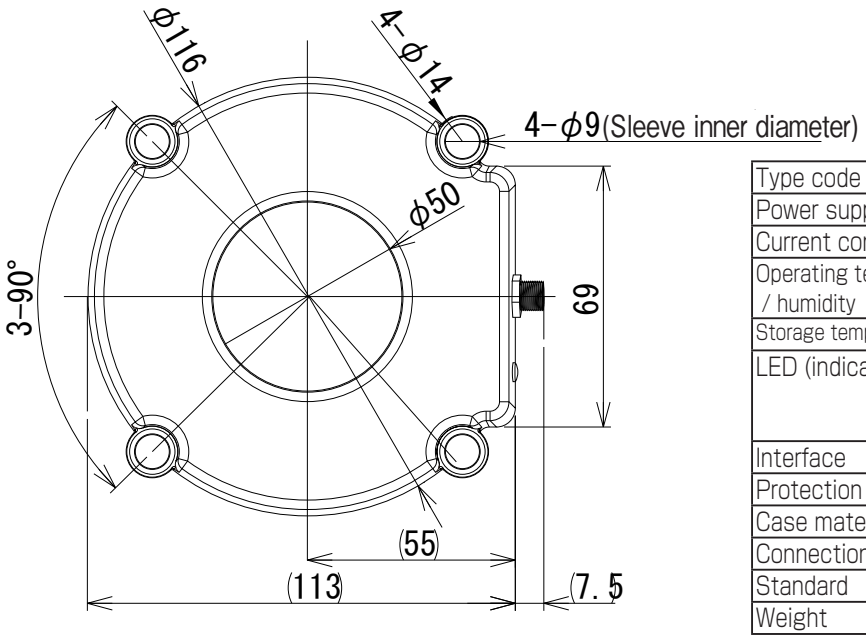

Type code	RSH080E-R01R-CN
Power supply	24V DC ± 10% (incl. ripple)
Current consumption	≦ 100mA
Operating temperature / humidity	0...50℃ / 35...90%RH
Storage temperature / humidity	0...70℃ / 35...90%RH
LED (indication)	Orange : In zone Lights-out: Application transmission without head
Interface	RS-232C
Protection class	IP67
Case material	PUR
Connection	M8 connector, 6Pin male
Standard	CE not acquired
Weight	470g

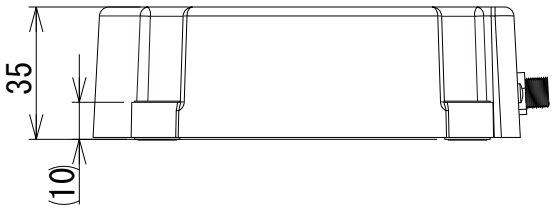

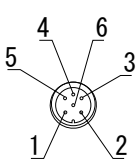

Pin	Color	Descriptions
1	Brown	Power supply +24V
2	White	Transmitting (TX)
3	Black	Receiving (RX)
4	Blue	Power supply ground (GND)
5	Green	Signal ground (SG)
6	Red	RTS RS232C In zone output H···With transmission head L: Transmission without head

5. Current output amplifier

5.1. Specification

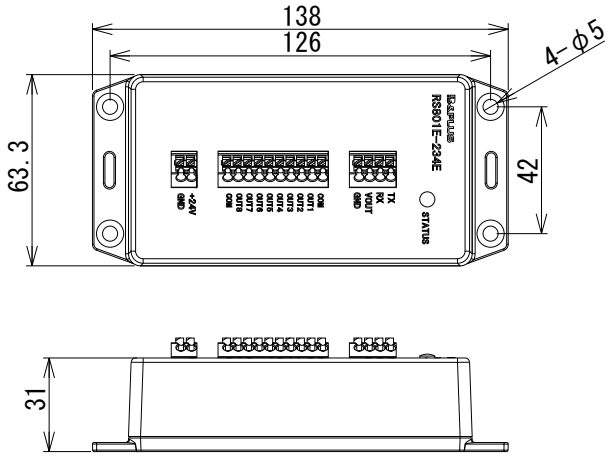

Type code		RS801E-234E
Applicable Transmitter head	Corner type	RSH080E-422R-CN
	Ring shape	RSH080E-R01R-CN
LED (indication)		Blue: Power supply ON, before initialization Green: Transmission without head Red: Transmission with head (in zone)
Power supply		24V DC ± 10% (incl. ripple)
Current consumption		≦250mA (in a current output maximum)
Resolution		0.002%FS
Accuracy		± 0.5%
Operating temperature / humidity		0...50℃ / 35...90%RH
Storage temperature / humidity		0...70℃ / 35...90%RH
Load resistance		400 Ω or less
Protection class		Without protection
Case material		ABS
Standard		CE acquisition finished
Weight		110g

5.2. Output electric current level

The current value output and current output amplifier are as follows.

Current value	Contents
0mA	A transmission head is not corresponding
4mA	The minimum temperature set to a transmission amplifier
20mA	The maximum temperature set to a transmission amplifier
21mA	Disconnection of the sensor (only when setting is on for checking disconnection)

Conversion type from a current value to temperature

$$\text{Temperature (℃)} = (\text{max temp.} - \text{min temp.}) \times \frac{(\text{Current value} - 4\text{mA})}{16\text{mA}} + \text{min.temp.}$$

5.3.LED (indication)

LED indicates the condition of the current output amplifier.

Color	Contents
Blue	Turns on when power is on.Turns off after the initialization completed.
Green	At the time of transmission head non-facing
Red	Inzone

6.About the wiring

6.1. Wiring of a transmission amplifier and the transmission head

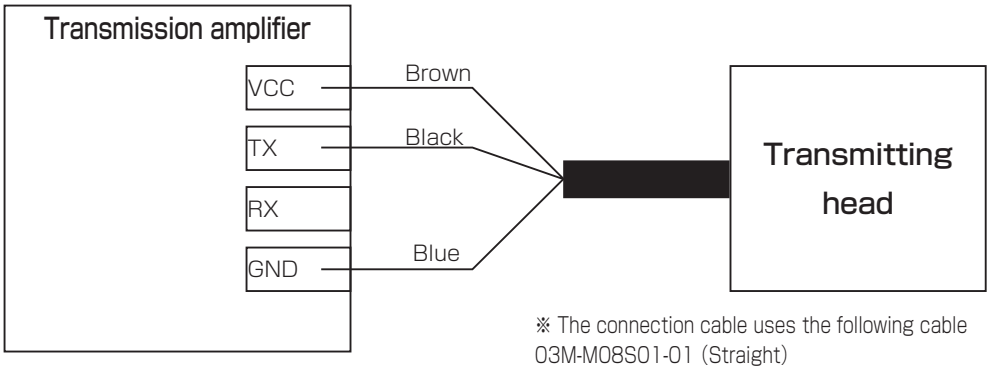

※ The connection cable uses the following cable
03M-M08S01-01 (Straight)
03M-M08R01-01 (Angle)
The model end is the length of the cable (01=1m)

Connection of the transmission side

Terminal stand of the transmission amplifier

IN1+	Sensor 1 in put +	IN8+	Sensor 8 in put +
IN1 −	Sensor 1 in put -	IN8 −	Sensor 8 in put -
IN2+	Sensor 2 in put +	VCC	Power input
IN2 −	Sensor 2 in put -	TX	TX RS232C transmits
IN3+	Sensor 2 in put +	RX	RX RS232C receives
IN3 −	Sensor 3 in put -	GND	Power supply ground
IN4+	Sensor 4 in put +		
IN4 −	Sensor 4 in put -		
IN5+	Sensor 5 in put +		
IN5 −	Sensor 5 in put -		
IN6+	Sensor 6 in put +		
IN6 −	Sensor 6 in put -		
IN7+	Sensor 7 n put +		
IN7 −	Sensor 7 in put -		

Output headpin assignment

No of the pin	Cable color	Descriptions
1	Brown	The VOUT power supply output
3	Blue	GND Ground
4	Black	SN Signal input

6.2. Wiring of a transmission amplifier and the transmission head

■ Thermocouple connection

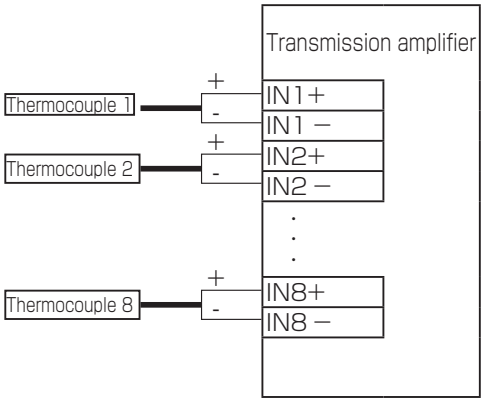

■ Resistance thermometer connection

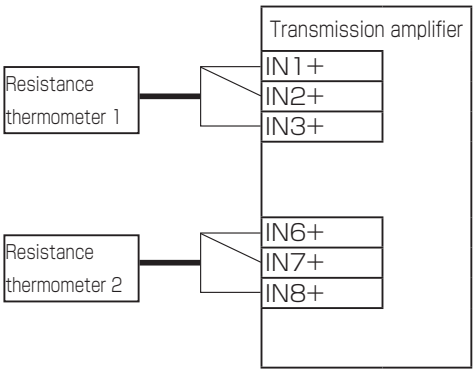

■ Thermistor connection

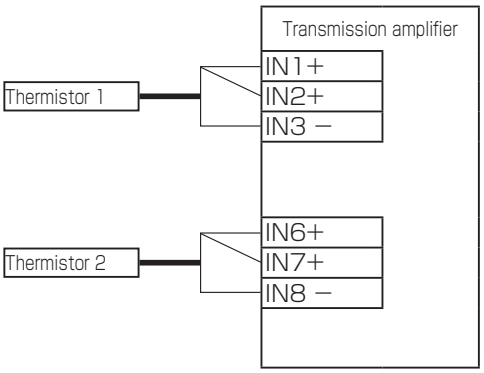

When you connect a thermocouple, place them from IN1, and then connected.
When there is a gap between the interval it can cause the disconnection error.

6.3. Wiring of the output head

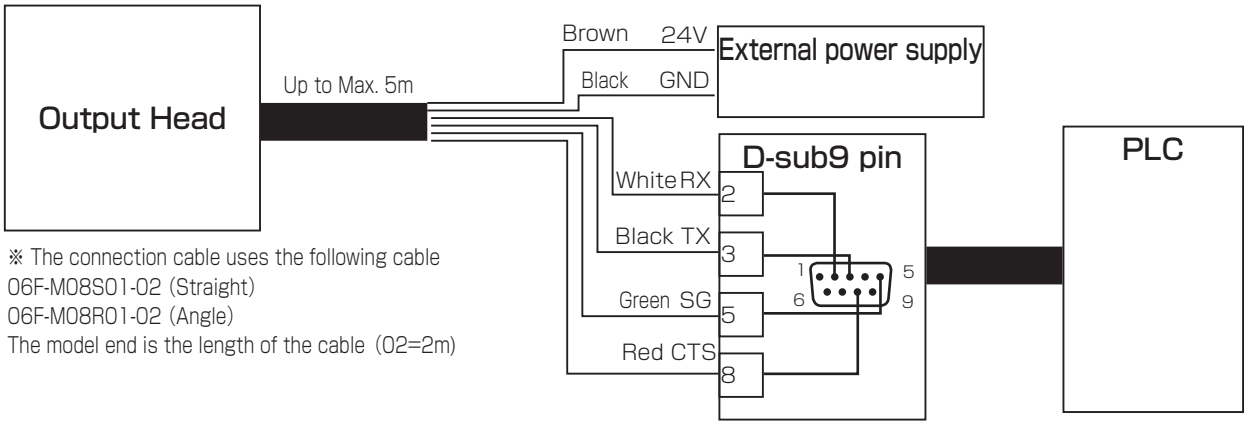

※ The connection cable uses the following cable
06F-M08S01-02 (Straight)
06F-M08R01-02 (Angle)
The model end is the length of the cable (02=2m)

Output headpin assignment

No of the pin	Cable color	Descriptions
1	Brown	+24V Power input
2	White	TX RS232C transmits
3	Black	RX RS232C receives
4	Blue	Power supply ground (GND)
5	Green	Signal ground (SG)
6	Red	RTS RS232C in one output

When digital output, connects to PC.

＊ The cable on the host device side is loose wires. Please contact us if you need a connector cable with D-sub 9 pins

6.4. Connection of current output amplifier

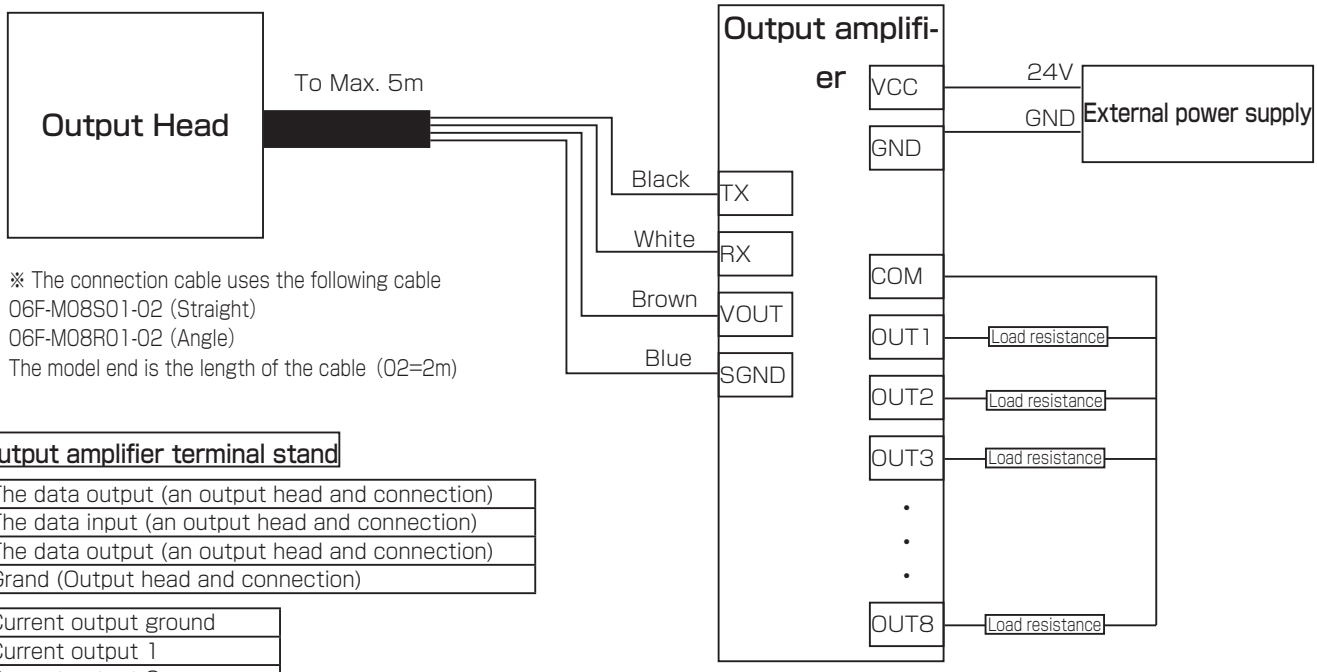

※ The connection cable uses the following cable
06F-M08S01-02 (Straight)
06F-M08R01-02 (Angle)
The model end is the length of the cable (02=2m)

Current output amplifier terminal stand

TX	The data output (an output head and connection)
RX	The data input (an output head and connection)
VOUT	The data output (an output head and connection)
SGND	Grand (Output head and connection)

COM	Current output ground
OUT1	Current output 1
OUT2	Current output 2
OUT3	Current output 3
OUT4	Current output 4
OUT5	Current output 5
OUT6	Current output 6
OUT7	Current output 7
OUT8	Current output 8
COM	Current output ground
VCC	Power input (+24V)
GND	Power supply ground

7.Installation

7.1. Neighborhood metal and mutual interference and transmission domain figure

In order to avoid influence of surrounding metal, or to avoid mutual influence between parallel-mounted sensors, keep the minimum free zone as described below.

■ When it is compact type

■ Surround Metal

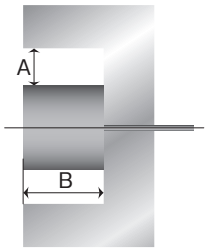

Parallel Setting

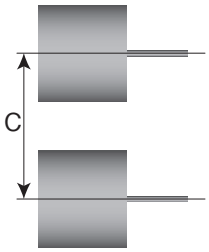

Type code	A*	B	C
RSH080T-422-CN	22	25	200
RSH080E-422R-CN			

* Possible that only one side, the metal contacts. (mm)

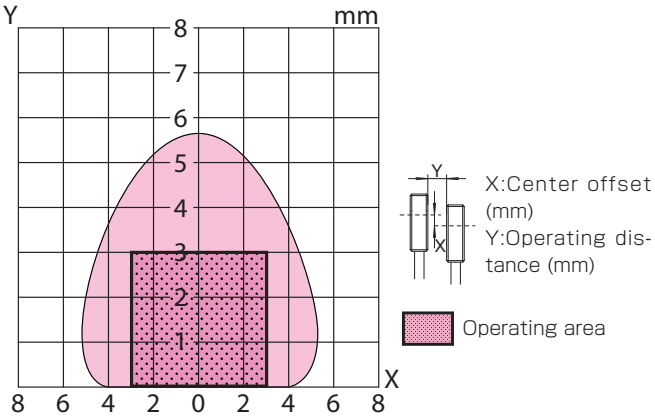

■ When it is ring type

■ Surround Metal

Parallel Setting

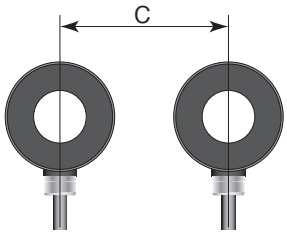

Type code	A	B	C
RSH080T-R01-CN	22	35	200
RSH080E-R01R-CN			

(mm)

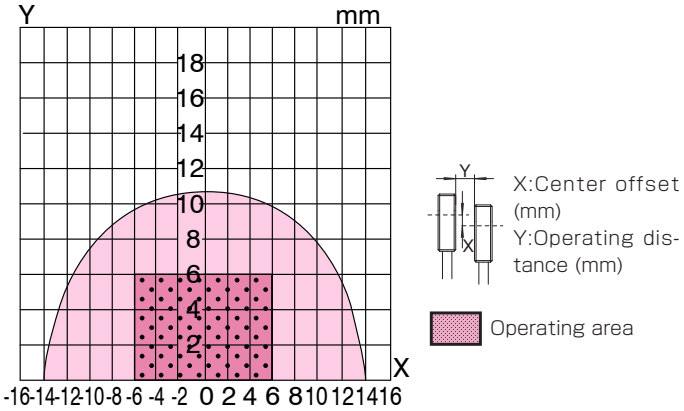

8.Protocol

Communication protocol specifications when transmitting to a command from a higher apparatus to the output head.
Please set the communication baud rate by attached application before communicating.

8.1. Communication Setting

Baud rate	**115200**、57600、38400、19200、9600、4800
Stop bits	**1**、2
Parity	**Even number**, Odd number,None
mode:	**Command mode, auto answer mode**

The bold-face is factory time of shipment

*There are two movement modes to this product.

① Command mode
Transmit data acquisition command and receiving data.
It is necessary for the superior apparatus to transmit a command

② Auto answer mode
When a transmission head faces, it is the mode which data automatically answer. The higher apparatus does not have to transmit a command and is answered data whenever temperature changes

8.2. About a command

The commands are as follows.

Command	Contents
D	Temperature data demand command
AE	Command for stopping automatic answering mode
AS	Command for starting automatic answering mode

The bold-face writes ASCII, and the small characters are a hexadecimal notation.

8.2.1. Command for data requirements

Read the temperature data of the channel. Please make sure to stop an auto-answer mode then transmit after making it to a interactive mode.

Command | **D** | **CH number** |

· response | **D** | **CH number** | **Special number** | **Six columns of temperature data** |

【 Normal 】

Two columns of four columns of integer part + decimals parts

+ or -

【Abnormality】 | NAK | Error code |

【Example】
Transmitted a temperature data acquisition command of ch2, and the reception temperature data were 123.45 degrees Celsius.

Command | D | 2 |

Response | D | 2 | + | 0 | 1 | 2 | 3 | 4 | 5 |

8.2.2. Command for stopping automatic answering mode

Stop an auto-answer mode and make it to interactive mode.

· command | **AE** |

· response

【 Normal 】 | ACK |

【Abnormality】 | NAK | Error code |

8.2.3. Command for starting automatic answering mode

Make temperature data an automatic-answering mode at the time of transmission department facing.

· command | **AS** |

· response

【 Normal 】 | ACK |

【Abnormality】 | NAK | Error code |

8.3. List of error codes (ASCII notation)

Error code		
1	Transmission department does not exist	There is no reply from a transmission head.
2	Disconnection error	A sensor is not connected
6	Interface error	The communication setting including the baud rate includes a mistake.
7	Format error	Failure on command procedures
8	Parameter error	Failure on command procedures

9. Setting method of the transmission amplifier

9.1. Wiring to a transmission amplifier

Connect a higher apparatus to a transmission amplifier via an RS232C cable and set a movement condition using the application. The application could be downloaded from our website.

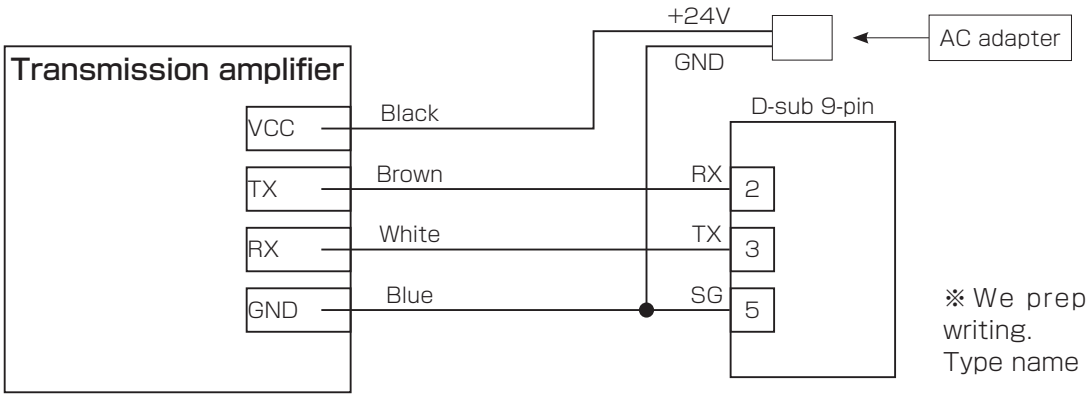

※ We prepare cable for setting writing.
Type name : CBL-Z1-RS232C

9.2. Setting of the transmission amplifier by the application software

① Start SensorSet.exe.
② Choose connected COM port number among COM Port (a).
③ After pushing Start(b), push Read(c). The setting of the transmission amplifier is displayed.
④ Change a parameter, and setting is written when push Write(d).

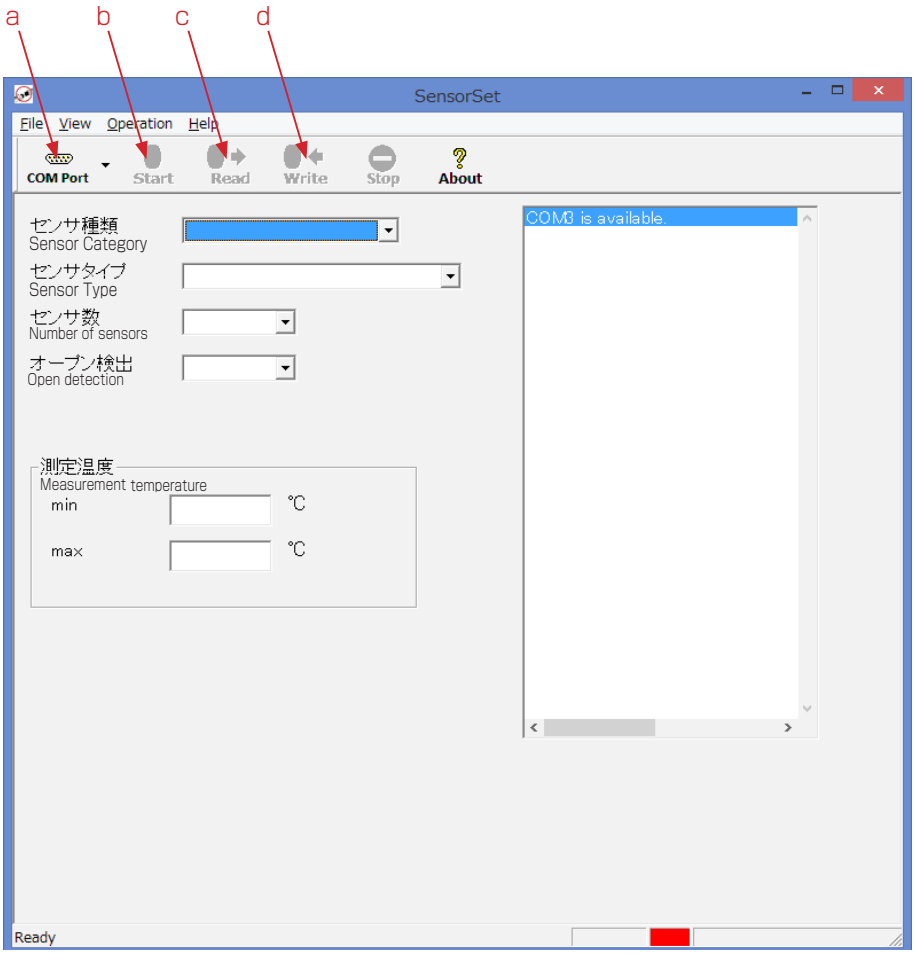

■ Parameter

Category of the sensors	Pick the sensor kind to connect. (thermocouple, resistance bulb, thermistor)
Type of the sensors	Pick the type of the sensor.
Numbers of the sensors	Pick the sensor kind to connect.
The open detection	Set the operation for detecting unconnected sensors. Detecting disconnection: ON Not detecting :OFF

■ Measurement temperature

The measurement temperature is effective at the time of current output amplifier connection.

min	Set temperature to output 4mA.
max.	Set temperature to output 20mA.

※ It is effective only when connect a current conversion amplifier

※ It is also possible to deliver pre-configured transmission amplifiers. If you need, please inform us.

10. Setting of the output head

10.1. Wiring of the output head

Please see page 7「wiring of the output head」

10.2. Setting of the output head by the application software

① Start attached application Temp8ch.

② Click COM Port(a) and select a connected communication port.

③ Scans the communication conditions such as baud rates when push the Scanning button (b)

④ when push the Property button (c), RS232 communication format and a parameter setting window display.
choose a baud rate, stop bit, parity, a movement mode and then press a write down button.

⑤ Select the number of the sensor which you want to begin to read by ch choice (d), and temperature data are displayed when pushing the temperature data demand button (e).

⑥ Polling is started when pushing the automatic start button (f), and temperature indication is automatically displayed.

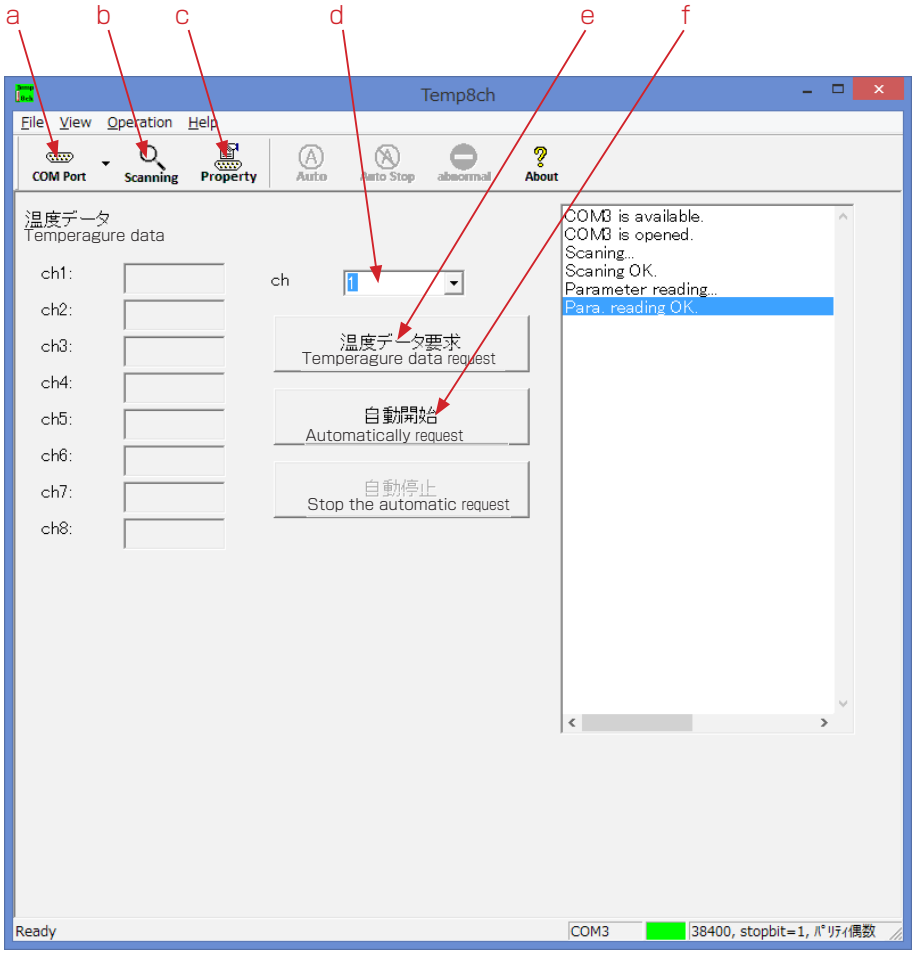

Wireless Power Supply by

B & PLUS K.K.

Mail : b-plus-usa@b-plus-kk.com
Web : http://www.b-plus-kk.com

* Info may change the mention contents such as specifications without a notice.
  Thank you for understanding
* Please refer to instruction manual or the user's guide. It can be download by HP.